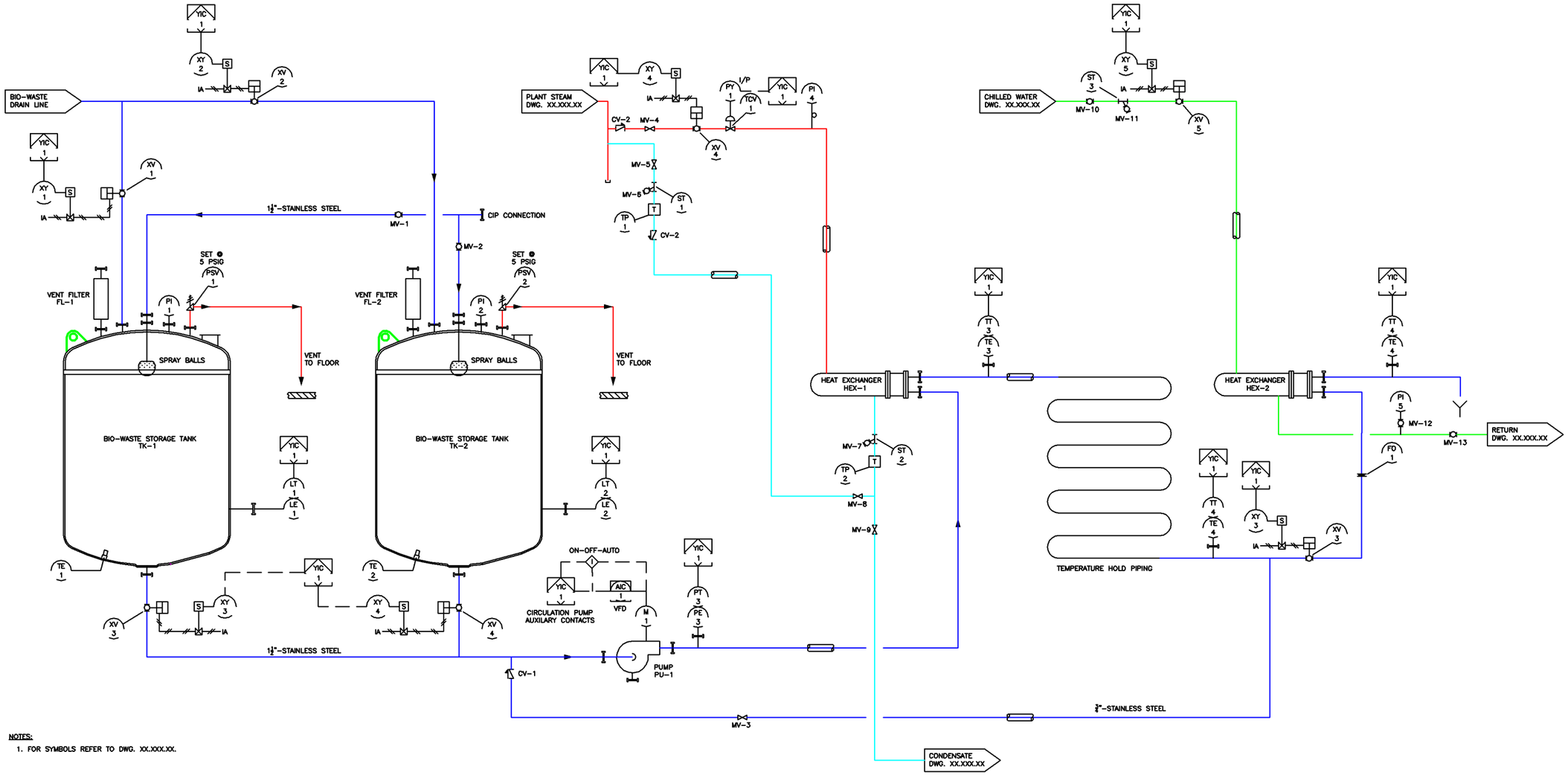

NOTES:

1. FOR SYMBOLS REFER TO DWG. XX.XXX.XX.

LEGEND:

- STEAM
- CONDENSATE
- BIO-WASTE
- COOLING WATER

THIS DRAWING IS THE PROPERTY OF QPS, LLC., AND IS NOT BE REPRODUCED, COPIED OR USED FOR ANY PURPOSE OTHER THAN CONSTRUCTION OF THIS PROJECT WITHOUT THE WRITTEN CONSENT OF QPS, LLC.

SEAL

SEAL

REVISIONS

DATE	BY	DESCRIPTION	REV
1/7/08	MM	CONCEPTUAL	1

PREPARED BY

Qualification Process Solutions
13406 Blythenia Road
Phoenix, MD 21131

PREPARED FOR

TITLE

BIO-WASTE SYSTEM P&ID

DESIGN BY	DRAWN BY	CHECKED BY
	MM	NB

SCALE	REVISION
NONE	1

DATE	DWG NO.
1/7/08	